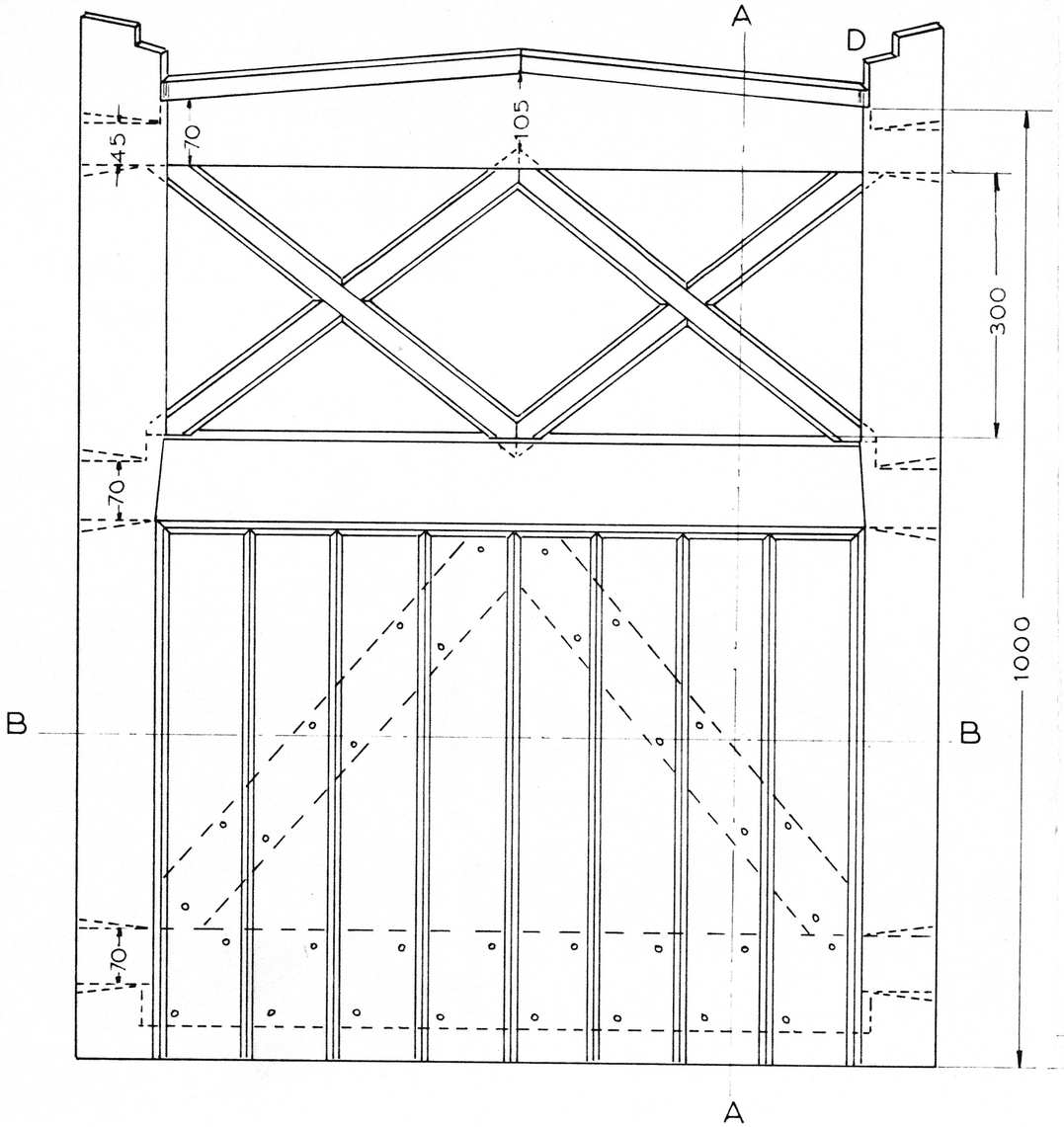

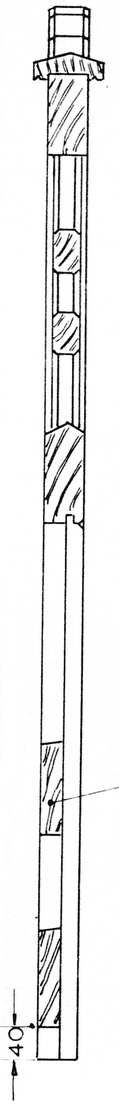

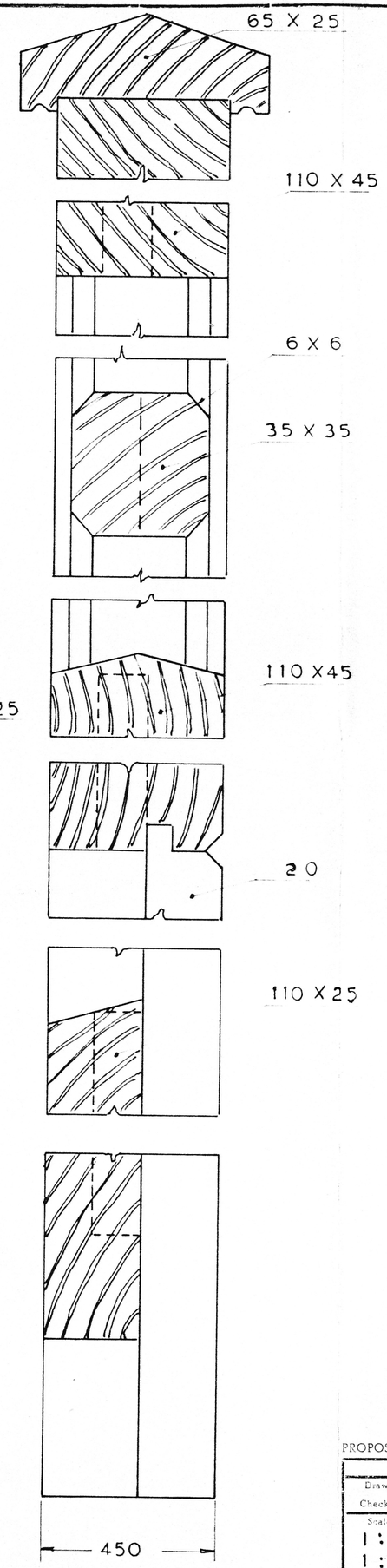

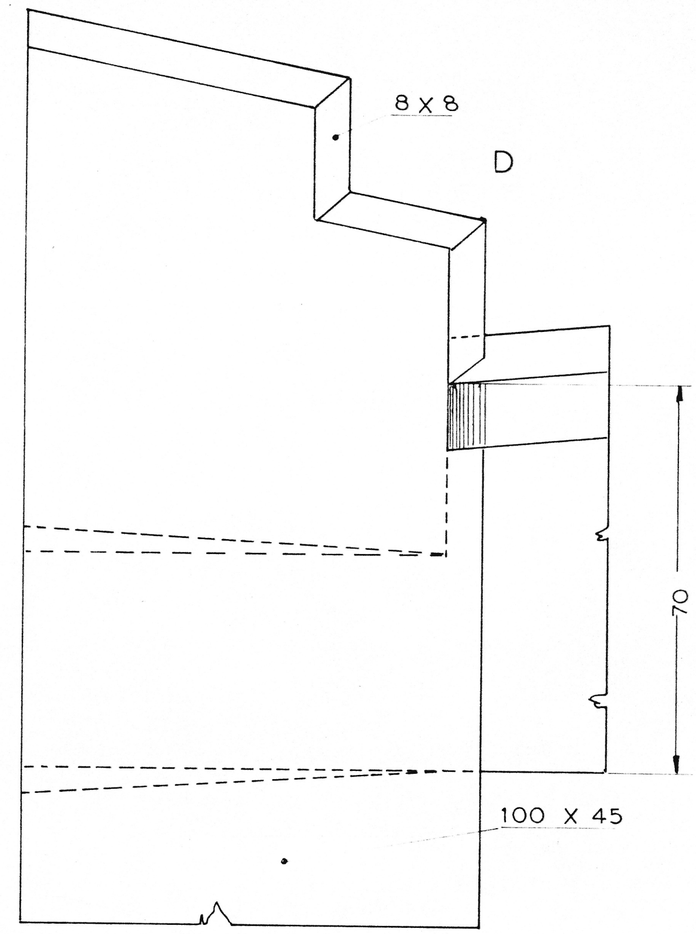

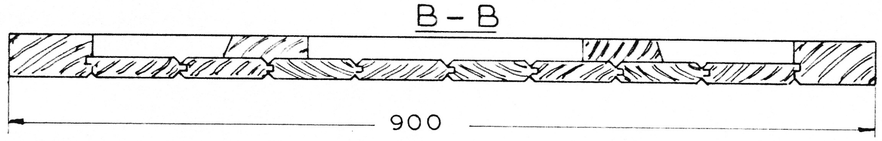

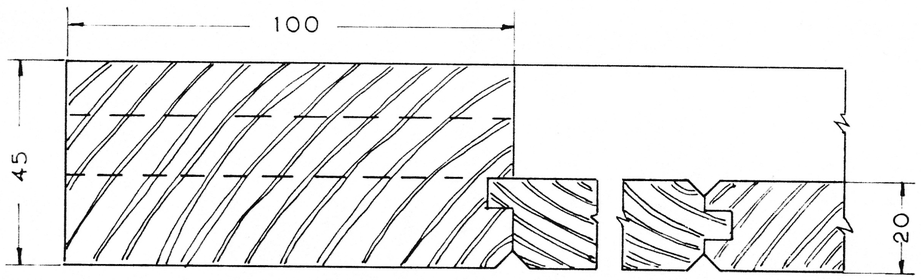

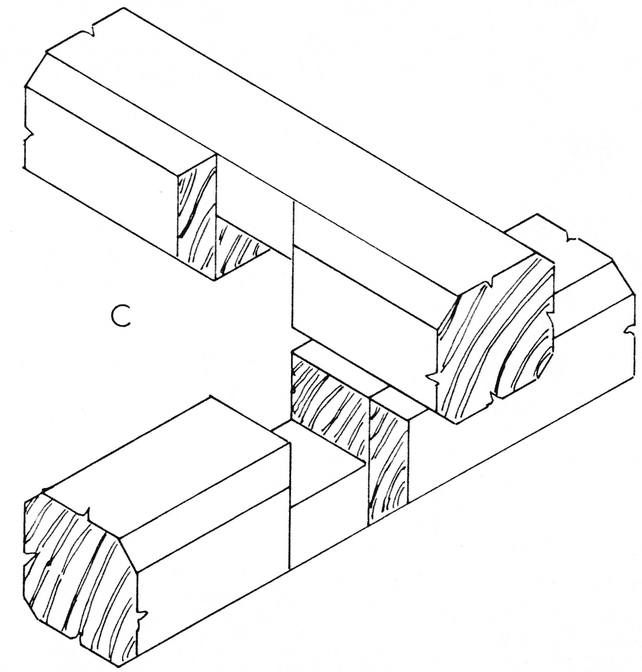

PROPOSAL OF THE TECHNICAL REPRESENTATION OF

	Date	Name		
Drawn	2.7.63			XII INTERNATIONAL VOCATIONAL TRAINING COMPETITION General Secretariat - Technical Office
Checked				
Scale 1 : 1 1 : 5	TIME 28 HOURS			Trade JOINERY Category B